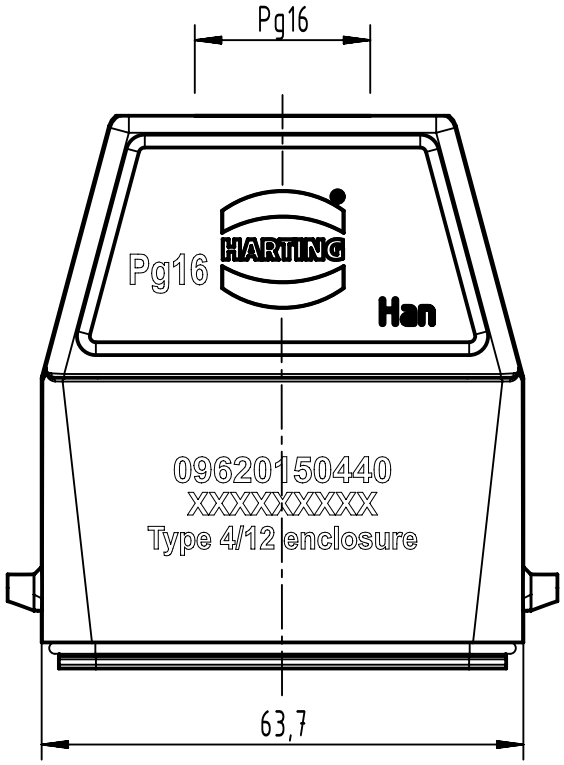

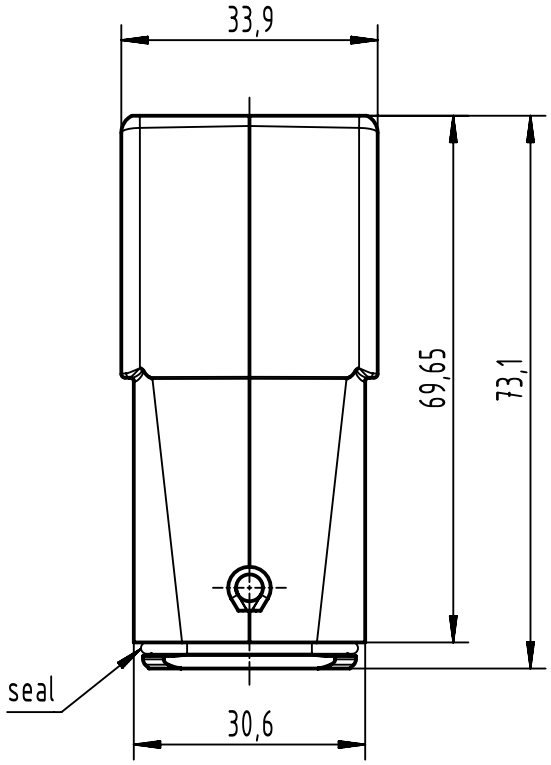

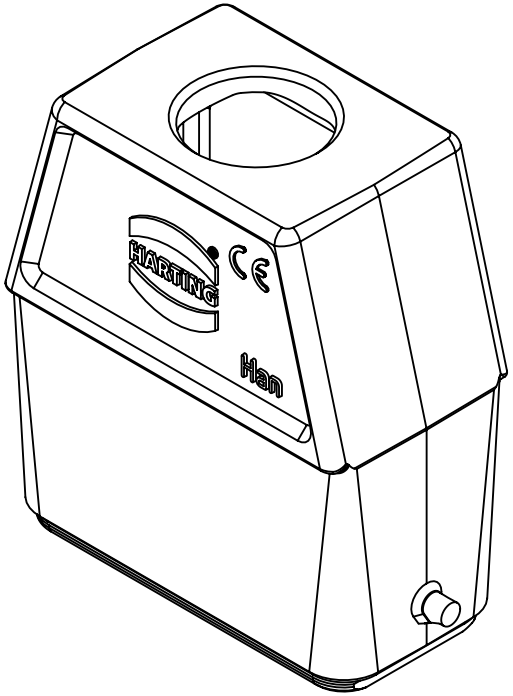

All Dimensions in mm Original Size DIN A4	Scale 1:1	Free size tol.		Ref. Sub.	
All rights reserved Department EL PD	Created by 100887	Inspected by GERB	Standardisation SAP_WFRT	Date 2022-07-05	State Final Release
	Title Han EMC 15 Hood Top Entry PG 16				Doc-Key / ECM-Nr. 100090412/UGD/006/E 500000220511
HARTING D-32339 Espelkamp	Type TB	Number 09 62 015 0440		Rev. E	Page 1/1

A4